1955ApJ...122..293P

HYDROMAGNETIC DYNAMO MODELS

EUGENE N. PARKER
Department of Physics, University of Utah, Salt Lake City, Utah
Received October 18, 1954; revised May 11, 1955

ABSTRACT

The purpose of this paper is to investigate the steady-state amplification of magnetic fields in a fluid It is shown that a rotating sphere of conducting fluid can regenerate a dipole magnetic field. It is sufficient for the angular velocity of rotation to vary with distance from the axis of rotation and for cyclonic fluid motions to be present The nonuniform rotation generates a toroidal field from the dipole field; the cyclones generate, from the toroidal field, loops of flux in the meridional plane which coalesce to amplify the dipole field The rotating sphere is discussed in relation to the liquid core of the earth and the geomagnetic dipole field. If, instead of a rotating sphere, one has a prismatic volume of fluid, it is possible to construct migratory dynamo waves The dynamo waves are discussed in relation to the solar convective zone; it is shown that such waves can account for many of the principal features of the observed solar magnetic activity

I. INTRODUCTION

The generation of magnetic fields $\boldsymbol{B}$ by a fluid with velocity $\boldsymbol{v}$ and conductivity σ is described by

$$\frac{\partial \boldsymbol{B}}{\partial t} = \nabla \times (\boldsymbol{v} \times \boldsymbol{B}) + \frac{1}{\mu \sigma} \nabla^2 \boldsymbol{B} . \tag{1}$$

Elsasser (1950)[1] has suggested that there may exist fluid motions capable of regenerating various magnetic-field configurations, such as the magnetic field of the earth. Such a device has been called a "hydromagnetic dynamo." Formally, from the kinematical point of view, the question is whether there exists a $\boldsymbol{v}$ such that a solution of equation (1) can be a magnetic field $\boldsymbol{B}$ which is maintained for an indefinite period of time. The problem is sufficiently difficult that we shall consider a specific model for the fluid motion rather than inquire in a general mathematical way into sufficient conditions on $\boldsymbol{v}$ for maintaining a field $\boldsymbol{B}$. The first model we consider is based on the geometry found in the earth. In the last section we will consider another model, that of dynamo waves, which may be of interest in connection with the sunspot cycle.

Observed at the surface of the planet, the magnetic field of the earth is primarily a (poloidal) dipole. However, the existence of nonuniform rotation in the liquid core indicates that within the core the field cannot be entirely poloidal (Elsasser 1950). We shall assume, as a model from which to begin our discussion of equation (1), that the primary large-scale components of the terrestrial magnetic field are a (poloidal) dipole field, which we observe directly, and a toroidal field within the conducting core. The boundary conditions require that the toroidal field vanish outside the region of electrical conductivity (Elsasser 1947; Bullard and Gellman 1954). The toroidal field consists of lines of force circling about the axis of the earth, parallel to lines of latitude. The toroidal field is generated from the poloidal field by the nonuniform rotation of the core.

Both the poloidal and the toroidal fields have rotational symmetry about the axis of the earth. Cowling's theorem (Cowling 1933) then tells us that they cannot be maintained through equation (1) by a single direct interaction with the fluid velocity $\boldsymbol{v}$. It is possible to generate the toroidal field directly from the poloidal field, as will be shown presently, but not vice versa.

To demonstrate the generation of the toroidal field $\boldsymbol{B}_t$ from the poloidal field $\boldsymbol{B}_p$, we

[1] The fundamentals of hydromagnetic theory may be found in Elsasser's (1950) review article and are not repeated here for reasons of economy.

© American Astronomical Society • Provided by the NASA Astrophysics Data System

1955ApJ...122..293P

shall use the cylindrical co-ordinates (ρ', ϕ, z) about the axis of the earth. We take the nonuniform rotation to be

$$\boldsymbol{v} = \boldsymbol{e}_\phi v(\rho') , \tag{2}$$

and the poloidal field to be

$$\boldsymbol{B}_p = \boldsymbol{e}_\rho B_{p\rho} + \boldsymbol{e}_z B_{pz} , \tag{3}$$

where $\boldsymbol{e}_\rho$, $\boldsymbol{e}_\phi$, and $\boldsymbol{e}_z$ represent unit vectors in the ρ'-, ϕ-, and z-directions, repectively. Then it is readily shown that

$$\nabla \times (\boldsymbol{v} \times \boldsymbol{B}_p) = \boldsymbol{e}_\phi B_{p\rho} \rho' \frac{\partial}{\partial \rho'} \left(\frac{v}{\rho'} \right) . \tag{4}$$

We see from equation (1) that $\nabla^2 \boldsymbol{B}_t$ is in the ϕ-direction. Since $\boldsymbol{B}_t$ is independent of ϕ, the ϕ-component of $\nabla^2 \boldsymbol{B}_t$ reduces to $\nabla^2 B_{t\phi} - B_{t\phi}/(\rho')^2$. Thus $\boldsymbol{B}_t$ has only a ϕ-component, which we denote by B. From equations (1) and (4) we see that, for steady-state conditions, B obeys

$$\nabla^2 B - \frac{B^2}{(\rho')^2} = -\mu \sigma B_{p\rho} \rho' \frac{\partial}{\partial \rho'} \left(\frac{v}{\rho'} \right) . \tag{5}$$

Since $\boldsymbol{B}_t$ is parallel to $\boldsymbol{v}$, it follows that the nonuniform rotation does not interact with $\boldsymbol{B}_t$. The net result, then, is that the nonuniform rotation does not alter $\boldsymbol{B}_p$ and has as its only effect the generation of an axially symmetric toroidal field, with opposite senses in the northern and southern hemispheres. Bullard (1954) has computed B resulting from various poloidal-field configurations.

II. GENERATION OF LOOPS

We must now demonstrate a fluid motion which, by interacting with the toroidal field $\boldsymbol{B}_t$, regenerates the poloidal field. Let us fix our attention on a region of the toroidal field sufficiently small in extent that we may regard the field as uniform throughout. We define a local Cartesian co-ordinate system (ξ, η, ζ) where the η-axis is parallel to the toroidal field and points toward the east; the ζ-axis is directed radially outward; and the ξ-axis points south and is tangent to the circle of longitude through the local origin. Hence, locally, the meridional planes are parallel to the $\zeta\xi$-plane. We denote the intensity of the toroidal field by B and the distance from the ζ-axis by ρ. Then

$$\boldsymbol{B}_t = \boldsymbol{e}_\phi B = \boldsymbol{e}_\eta B , \qquad \rho = \sqrt{(\xi^2 + \eta^2)} . \tag{6}$$

Now suppose that there is a body of fluid moving along the ζ-axis through the toroidal field. We will further suppose that the moving fluid is rotating about the ζ-axis. Dynamically, such a fluid motion is related to the cyclones and anticyclones observed in the atmosphere, in which the primary driving force is radial convection and the rotation results from the Coriolis deflection of the influx and efflux of fluid at the ends of the vertically moving column.

An elementary consideration of Coriolis forces suggests that in the northern hemisphere fluid flowing into the base of a rising convective column is deflected to the right as it approaches the column. The result is a counterclockwise rotation about the axis of the column. Opposite rotational forces apply to the efflux at the top of the convecting column. This is just the conventional elementary explanation for cyclones in the atmosphere and is not intended as a proof of the existence of cyclonic motions in the core; we wish only to suggest that it is not unreasonable to *postulate* cyclonic motions.

Unfortunately, if we include the influx and efflux in the fluid motion, the mathematics of a rigorous analytical solution becomes extremely complicated. We shall, therefore, idealize the problem. We shall simply constrain the fluid to rotate around the ζ-axis and consider a fluid column of infinite length along the ζ-axis. In order to restrict to finite

© American Astronomical Society • Provided by the NASA Astrophysics Data System

1955ApJ...122..293P

extent the region of interaction between the magnetic field and the fluid motion, we assume that the toroidal field is initially a slab with a thickness of the order of a in the ζ-direction. With these simplifications, the interaction of our idealized fluid motion and toroidal field may be computed rigorously in the limit of infinite electrical conductivity of the fluid.

To demonstrate that nothing essential has been altered by the idealization, the problem has been recomputed in the appendix for fluid motion of finite extent in the ζ-direction, involving influx and efflux of fluid. A perturbation approximation is used, and it is easily shown that we obtain the same results as from the idealized model.

Consider, then, the idealized fluid motion,

$$v_\xi = -w_0\left(\frac{\eta}{a}\right)S(\rho)\,, \qquad v_\eta = +w_0\left(\frac{\xi}{a}\right)S(\rho)\,, \qquad v_\zeta = v_0R(\rho)\,, \tag{7}$$

where w_0, v_0, and a are constants. We assume that $S(\rho)$ and $R(\rho)$ vanish for large ρ and have a maximum at $\rho = 0$. The Gaussian $\exp(-\rho^2/a^2)$ would be typical of their behavior. Here v_ξ and v_η represent a rotation about the vertical ζ-axis.

The result of the interaction of the fluid given by equation (7) may be understood if we first consider the effect of v_ζ. The vertical motion v_ζ will bulge up the toroidal field so that the lines of force in the vicinity of the bulge have the shape of a capital omega, Ω, and v_ζ and v_η, which represent a rotation about the vertical axis, will rotate the loop of the omega about a vertical axis, so that its projection on the meridional plane (the plane perpendicular to the initial $\boldsymbol{B}_t$) will form a closed loop. Assuming many cyclones distributed throughout the core, we obtain many such meridional loops. It will be shown in Section III that these loops may coalesce to form a poloidal dipole field.

Let us now consider quantitatively the formation of meridional loops. For infinite conductivity, equation (1) reduces to

$$\frac{\partial \boldsymbol{B}}{\partial t} = \nabla \times (\boldsymbol{v} \times \boldsymbol{B})\,. \tag{8}$$

If we replace $\boldsymbol{B}$ by $\boldsymbol{\omega}$, we note that we have just the usual Helmholtz equation for vorticity. Cauchy's integral (Brand 1947) of this equation may be applied (Lundquist 1952), giving the Lagrangian solution,

$$\boldsymbol{B}[\boldsymbol{r}(\boldsymbol{r}_0, t)] = [\boldsymbol{B}(\boldsymbol{r}_0, 0)\cdot\nabla_0]\,\boldsymbol{r}(\boldsymbol{r}_0, t)\,, \tag{9}$$

where $\boldsymbol{r}(\boldsymbol{r}_0, t)$ represents the position at time t of an element of fluid initially at $\boldsymbol{r}_0$, and ∇_0 represents differentiation with respect to $\boldsymbol{r}_0$.

By equation (7) the distance of an element of fluid from the ζ-axis is independent of time. Thus ρ is constant for a given element of fluid,

$$\rho = \lambda\,. \tag{10}$$

Then, at a time t, the co-ordinates of an element of fluid initially at (ξ_0, η_0, ζ_0) will be

$$\xi = \xi_0 \cos\left[\frac{S(\lambda)\,w_0 t}{a}\right] - \eta_0 \sin\left[\frac{S(\lambda)\,w_0 t}{a}\right], \tag{11}$$

$$\eta = \xi_0 \sin\left[\frac{S(\lambda)\,w_0 t}{a}\right] + \eta_0 \cos\left[\frac{S(\lambda)\,w_0 t}{a}\right], \tag{12}$$

$$\zeta = v_0 R(\lambda)\,t + \zeta_0\,, \qquad \lambda = (\xi_0^2 + \eta_0^2)^{1/2}\,. \tag{13}$$

© American Astronomical Society • Provided by the NASA Astrophysics Data System

1955ApJ...122..293P

Defining the functions

$$Z(\lambda) \equiv R(\lambda)\, v_0 t, \qquad \Psi(\lambda) \equiv \frac{S(\lambda)\, w_0 t}{a}, \tag{14}$$

equations (11), (12), and (13) may be solved for (ξ_0, η_0, ζ_0) to give

$$\xi_0 = +\xi \cos\Psi + \eta \sin\Psi\,, \tag{15}$$

$$\eta_0 = -\xi \sin\Psi + \eta \cos\Psi\,, \tag{16}$$

$$\zeta_0 = \zeta - Z\,. \tag{17}$$

The initial toroidal field has only an η-component. Thus, of $\nabla_0 \boldsymbol{r}$, we need only $\partial \boldsymbol{r}/\partial \eta_0$. From equations (11), (12), and (13) it is readily shown that

$$\frac{\partial \xi}{\partial \eta_0} = \frac{\eta_0 \xi - \xi_0 \eta}{\lambda^2} - \Psi' \frac{\eta_0 \eta}{\lambda}, \tag{18}$$

$$\frac{\partial \eta}{\partial \eta_0} = \frac{\xi_0 \xi + \eta_0 \eta}{\lambda^2} + \Psi' \frac{\eta_0 \xi}{\lambda}, \tag{19}$$

$$\frac{\partial \zeta}{\partial \eta_0} = Z' \frac{\eta_0}{\lambda}. \tag{20}$$

The primes denote differentiation with respect to λ. Introducing the azimuthal angle ψ measured from the ξ-axis about the ζ-axis, we have

$$\xi = \lambda \cos\psi\,, \qquad \eta = \lambda \sin\psi\,. \tag{21}$$

Equations (15) through (20) may be considerably simplified. Substituting equations (18), (19), and (20) in equation (9), and using equation (21), we obtain the field at (λ, ψ, ζ) after a time t as follows:

$$B_\xi = -B(\zeta - Z)\,[\sin\Psi + \lambda\Psi' \sin\psi \sin(\psi - \Psi)]\,, \tag{22}$$

$$B_\eta = +B(\zeta - Z)\,[\cos\Psi + \lambda\Psi' \cos\psi \sin(\psi - \Psi)]\,, \tag{23}$$

$$B_\zeta = +B(\zeta - Z)\, Z \sin(\psi - \Psi)\,. \tag{24}$$

The magnetic field $\boldsymbol{B}$, given by equations (22), (23), and (24), is shown in Figure 1 by the continuous ribbons. To consider the decay of $\boldsymbol{B}$ we decompose it into two parts, $\boldsymbol{\alpha}$ and $\boldsymbol{\beta}$. Here $\boldsymbol{\beta}$ is the magnetic field that would result if v_ζ were zero, i.e., $Z = 0$, and is shown in Figure 2; and $\boldsymbol{\alpha}$ is $\boldsymbol{B} - \boldsymbol{\beta}$.

Putting $Z = 0$ in equations (22), (23), and (24), we have

$$\beta_\xi = -B(\zeta)\,[\sin\Psi + \lambda\Psi' \sin\psi \sin(\psi - \Psi)]\,, \tag{25}$$

$$\beta_\eta = +B(\zeta)\,[\cos\Psi + \lambda\Psi' \cos\psi \sin(\psi - \Psi)]\,, \tag{26}$$

$$\beta_\zeta = 0\,. \tag{27}$$

Then, since

$$\boldsymbol{B} = \boldsymbol{\alpha} + \boldsymbol{\beta}\,, \tag{28}$$

$\boldsymbol{\alpha}$ is given by

$$\alpha_\xi = -\,[B(\zeta - Z) - B(\zeta)]\,[\sin\Psi + \lambda\Psi' \sin\psi \sin(\psi - \Psi)]\,, \tag{29}$$

$$\alpha_\eta = +\,[B(\zeta - Z) - B(\zeta)]\,[\cos\Psi + \lambda\Psi' \cos\psi \sin(\psi - \Psi)]\,, \tag{30}$$

$$\alpha_\zeta = +B(\zeta - Z)\, Z' \sin(\psi - \Psi)\,. \tag{31}$$

© American Astronomical Society • Provided by the NASA Astrophysics Data System

1955ApJ...122..293P

Now suppose that the fluid motion comes to a halt after having rotated through $\pi/2$ in the vicinity of the ζ-axis. Then, in the vicinity of the ζ-axis, the field has been rotated to the ξ-direction. Assuming $Z(\lambda)$ and $\Psi(\lambda)$ to be Gaussian functions, we put

$$Z(\lambda) = a\Psi(\lambda) = a\frac{\pi}{2}\exp\left(-\frac{\lambda^2}{a^2}\right). \tag{32}$$

For this case, $\boldsymbol{B}$ is shown by the solid lines in Figure 1; $\boldsymbol{\beta}$ is shown by the continuous ribbons in Figure 2. The intermittent ribbons in Figure 1 represent $-\boldsymbol{\beta}$. The lines of force of $\boldsymbol{\alpha}$, which is $\boldsymbol{B} - \boldsymbol{\beta}$, form the closed curves obtained by combining the solid and the broken ribbons in Figure 1. Since $\boldsymbol{\beta}$ is just the projection of $\boldsymbol{B}$ on the $\xi\eta$-plane, the closed curves lie on cylindrical surfaces which are parallel to the ζ-axis. Figure 3, *a*, shows the surface inclosed by the lines through P and Q in Figure 1. Figure 3, *b*, shows

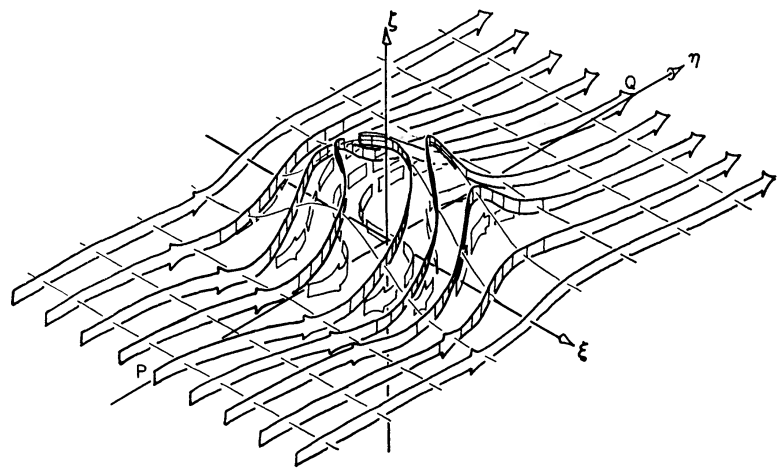

FIG 1.—The deformation of a slab of toroidal field by cyclonic fluid motion. The ribbons underneath represent $-\boldsymbol{\beta}$.

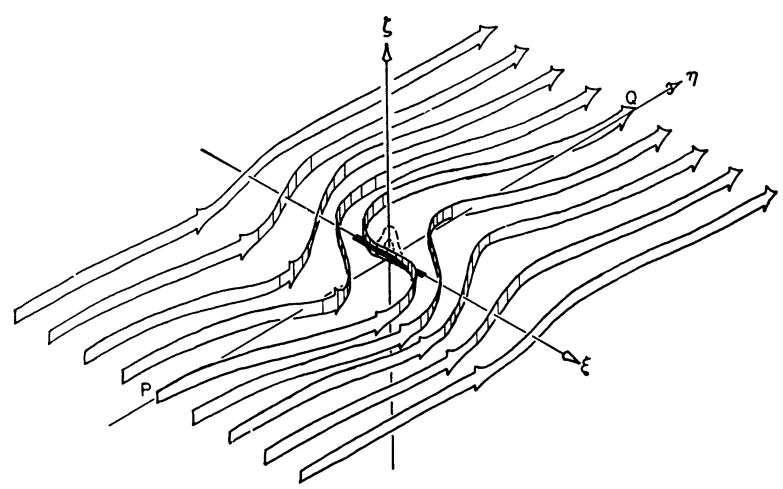

FIG. 2.—The deformation of a slab of toroidal field by a cyclonic fluid motion in the absence of vertical motion. This is the field $+\boldsymbol{\beta}$.

© American Astronomical Society • Provided by the NASA Astrophysics Data System

1955ApJ...122..293P

the same surface tipped down so that we see only the projection on the $\zeta\xi$-plane. In this projection the sign of the lines of force encircling *PDB* and *CEQ* is clockwise, whereas the lines encircling *DECB* have a counterclockwise sign. We see that the net result is a counterclockwise sign for *PDE*. We note, in fact, that so long as $Z(\lambda)$ and $\Psi(\lambda)$ are positive quantities and monotonically decreasing functions of λ, the central portion *DECB* will always predominate, with *PDE* representing a net counterclockwise rotation.

Projecting $\boldsymbol{\alpha}$ on the $\eta\zeta$-plane in the same manner as on the $\zeta\xi$-plane demonstrates a circulation of flux about the ξ-direction, in a clockwise direction as viewed from a point on the positive ξ-axis. Thus we see that $\boldsymbol{\alpha}$ is composed of loops of flux circulating about the η-direction plus loops circulating about the ξ-direction.

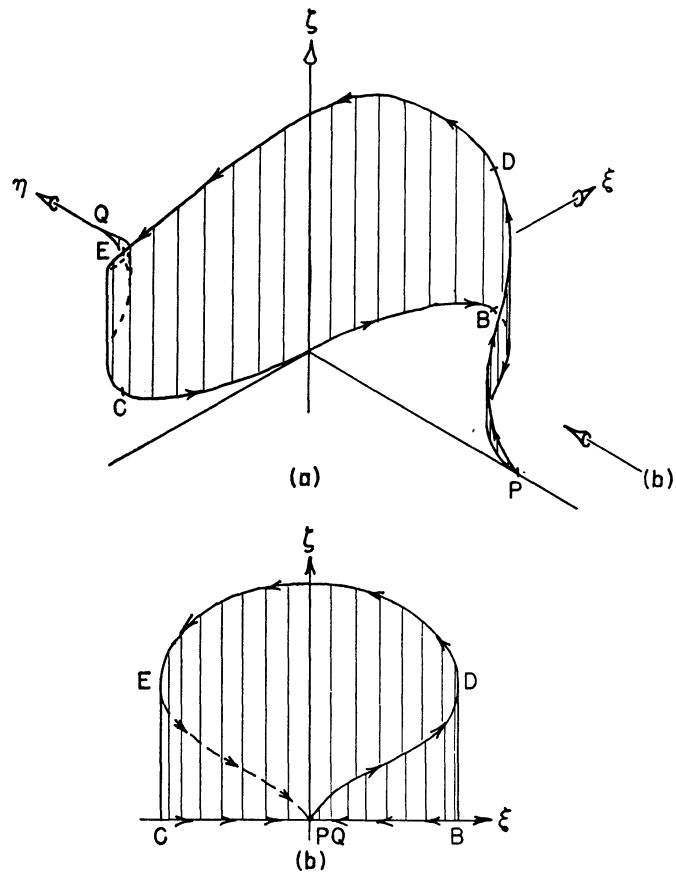

FIG. 3.—*a*, Isometric drawing of the surface inclosed by the closed line of force of α which passes through *P* and *Q*. *b*, The projection of the surface onto the $\zeta\xi$-plane. The arrow in *a* indicates the direction in which the projection is viewed (from the negative η-axis).

By subtracting the initial toroidal field from $\boldsymbol{\beta}$, it may be seen from Figure 2 that $\boldsymbol{\beta}$ consists of two loops of flux in the $\xi\eta$-plane, in addition to the initial toriodal field. The two loops have opposite directions: Viewed from a point on the positive ζ-axis, the loop for $\eta > 0$ circulates in a clockwise direction. It follows, then, that the field $\boldsymbol{B}$, shown by the solid lines in Figure 1 and given by equations (22), (23), and (24), is equivalent to the initial toroidal field plus the three mutually perpendicular sets of loops shown in Figure 4*a*.

The perturbation computation in the appendix separates the sets of loops in quite a natural way: It is a second-order perturbation calculation; the terms of first and second order in the rotation Ψ give the two loops of opposite direction with axes parallel to the ζ-axis; the terms of first and second order in the vertical motion Z give the loop circulat-

© American Astronomical Society • Provided by the NASA Astrophysics Data System

1955ApJ...122..293P

ing about the ξ-direction; the cross-product term ΨZ results in the loop circulating about the η-direction.

It is interesting, though not essential, to note that the three sets of loops with mutually perpendicular axes may be reduced to two sets of loops by further idealization, eliminating the loop circulating about the ξ-axis. If, instead of equation (32), we write

$$Z = b\,\frac{\pi}{2}\exp\left(-\frac{\lambda^2}{b^2}\right), \qquad \Psi = \frac{\pi}{2}\exp\left(-\frac{\lambda^2}{a^2}\right), \tag{33}$$

and make $a \gg b$, then in the region surrounding the ζ-axis, where Z is nonvanishing, Ψ is essentially constant and equal to $\pi/2$. As a result of the rotation Ψ, then, we have,

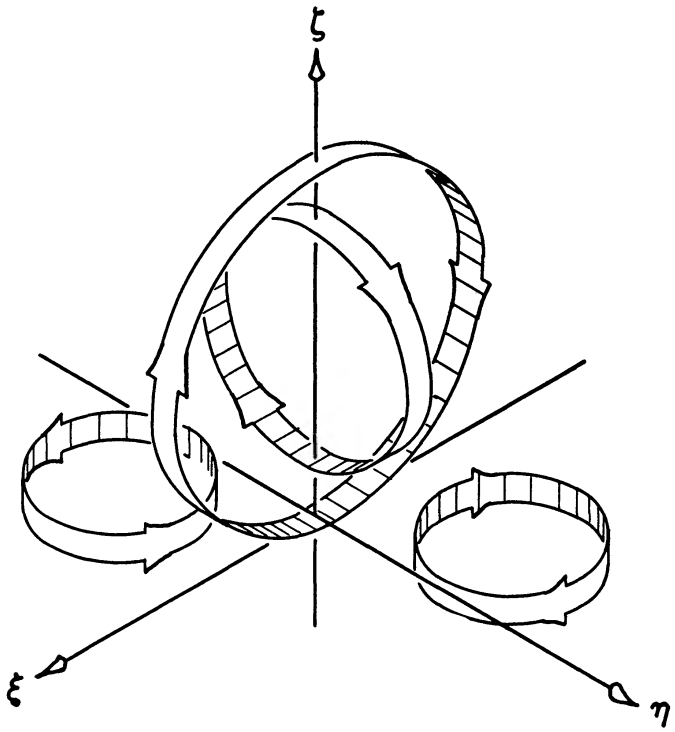

FIG. 4*a*.—Schematic drawing of the three sets of mutually perpendicular loops into which each closed line of force of $\boldsymbol{a}$ may be resolved.

in the region of nonvanishing Z, a uniform field in the ξ-direction. The vertical motion produces a hump in this uniform field, as shown by the broken line in Figure 2.

Noting that

$$\Psi(\lambda) = \frac{\pi}{2} + O^2\left(\frac{\lambda}{a}\right), \qquad \Psi'(\lambda) = O\left(\frac{\lambda}{a}\right), \tag{34}$$

we obtain, from equations (22), (23), and (24), the components of $\boldsymbol{B}$:

$$B_\xi = -B(\zeta - Z)\left[1 + O^2\left(\frac{\lambda}{a}\right)\right], \tag{35}$$

$$B_\eta = +B(\zeta - Z)\,O^2\left(\frac{\lambda}{a}\right), \tag{36}$$

$$B_\zeta = -B(\zeta - Z)\,Z'\cos\psi + O^2\left(\frac{\lambda}{a}\right)\exp\left(-\frac{\lambda^2}{b^2}\right). \tag{37}$$

© American Astronomical Society • Provided by the NASA Astrophysics Data System

1955ApJ...122..293P

Then

$$\beta_\xi = -B(\zeta)\left[1+O^2\left(\frac{\lambda}{a}\right)\right], \tag{38}$$

$$\beta_\eta = +B(\zeta)\,O^2\left(\frac{\lambda}{a}\right), \tag{39}$$

$$\beta_\zeta = 0\,, \tag{40}$$

and

$$\alpha_\xi = -\,[B(\zeta-Z)\,-B(\zeta)\,]\left[1+O^2\left(\frac{\lambda}{a}\right)\right], \tag{41}$$

$$\alpha_\eta = +\,[B(\zeta-Z)\,-B(\zeta)\,]\,O^2\left(\frac{\lambda}{a}\right), \tag{42}$$

$$\alpha_\zeta = -B(\zeta-Z)\,Z'\cos\psi+O^2\left(\frac{\lambda}{a}\right)\exp\left(-\frac{\lambda^2}{b^2}\right). \tag{43}$$

We see that the η-component of $\boldsymbol{\alpha}$ may be neglected, eliminating the loop circulating about the ξ-direction. Figure 4*b* shows the two sets of loops into which the idealized field may be resolved.

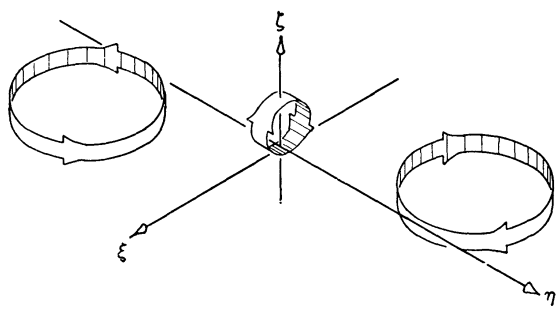

FIG 4*b* —Schematic drawing of the two sets of loops into which each line of α may be resolved when the vertical fluid motion is confined to a small neighborhood of the ζ-axis.

III. CANCELLATION OF LOOPS

Having demonstrated how loops of magnetic flux may be produced locally from the toroidal field, let us now consider what happens when a large number of cyclones appear near one another. In this section we shall demonstrate that all loops except those circulating about the η-direction can be made to vanish.

To begin with, consider a large number of groups of loops (each group as shown in Fig. 4*a*) distributed throughout the core of the earth. If (r, θ, ϕ) represent spherical co-ordinates with the axis of the earth at $\theta = 0$, then the ζ-axis of each local co-ordinate system is in the r-direction, the ξ-axis is in the θ-direction, and the η-axis is in the ϕ-direction.

Let us assume that all the loops in the meridional or local $\zeta\xi$-planes have the same direction of field. So far, we have discussed explicitly only the loops produced by an upwelling of fluid. There may, of course, be sinking regions. In order for a sinking region to produce a loop with the same direction as an upwelling, it may be seen from equations (29) and (31) or from Figure 1 that the direction of rotation of the fluid must be reversed. We shall assume, therefore, that sinking regions all have the opposite direction of rotation from that of upwelling regions and are distributed throughout the core in equal number with the upwelling regions.

© American Astronomical Society • Provided by the NASA Astrophysics Data System

1955ApJ...122..293P

Considering equations (30) and (31) or Figure 1, we can readily see that the loop circuating about the local ξ-direction (θ-direction) produced by an upwelling has a direction opposite to a similar loop produced by a sinking region. Let l represent the average separation of groups of loops, and let P represent the radius of the core. Then, upon expanding the loops circulating about the local ξ-directions in a series of spherical harmonics over the core, the alternation of sign of neighboring loops results in the leading term in the series being P_n^m (cos θ) cos $(m\phi + \delta_m)$, where n and m are both of the order of P/l.

The two loops in each group circulating about the local ζ-direction (r-direction) have opposite directions and, upon expansion over the core, also contribute as the leading term, $n, m \approx P/l$.

The loop in each group circulating about the local η-direction (ϕ-direction) will have the same direction in every case and, hence, will contribute a dipole P_1 (cos θ) as the leading term.

The decay rate of a mode is proportional to $n^2 + m^2$. Thus the ratio of the rate of decay of the superposed loops with axes in the ϕ-direction to either of the other two sets of loops is of the order of $(l/P)^2$. In the limit, as we consider more and smaller cyclones, $(l/P) \rightarrow 0$, and only the loops with axes in the ϕ-direction remain. To put the matter differently, unless there is a predominant direction, the loops cancel one another.

There are other circumstances under which the only loops to survive are those circulating about the ϕ-direction. For instance, if there were not so many loops produced by sinking as by upwelling fluid, then the loops with axes in the θ-direction would not vanish in the limit as $(l/P) \rightarrow 0$, since the loops produced by sinking fluid would not entirely cancel the loops generated by upwelling fluid. However, if the region of vertical motion is confined to a small neighborhood of the local ζ-axis, then we obtain a set of loops, as described in equations (35)–(43), in which the loops with axes in the θ-direction are not generated. Thus the problem of their cancellation does not arise.

It is easily demonstrated in this case that the loops with axes in the ϕ-direction will predominate. The dipole moment of a loop is of the order of the total flux circulating about the axis of the loop multiplied by the radius of the loop. Thus, initially, the moment of each individual loop with axis in the r-direction is Ba^3. For the ϕ-direction the moment of each loop is Bb^3. The loops circulating about the θ-direction arise from the $\mathbf{a}$ given in equations (41), (42), and (43). The field intensity is of the order of $B(b/a)^2$, so that the total moment is $B(b/a)^2b^3$. If a dipole field throughout the core decays according to exp $(-kt)$, then, upon superposition, the loops with axes in the r-, θ-, and ϕ-directions contribute to the over-all field, according to

$$M_r \approx Ba^3 \exp\left[\frac{-ktP}{l^2}\right], \tag{44}$$

$$M_\theta \approx Ba^3 \left(\frac{b}{a}\right)^5 \exp(-kt), \tag{45}$$

$$M_\phi \approx Ba^3 \left(\frac{b}{a}\right)^3 \exp(-kt), \tag{46}$$

respectively. For $t > 0$ we find, in the limit as $l \rightarrow 0$, that

$$M_r : M_\theta : M_\phi \approx 0 : \left(\frac{b}{a}\right)^2 : 1 . \tag{47}$$

Thus, in the limit as $(b/a) \rightarrow 0$, there remain only the loops circulating about the ϕ-direction.

© American Astronomical Society • Provided by the NASA Astrophysics Data System

1955ApJ...122..293P

We have demonstrated that one result of the interaction of cyclonic fluid motions with the toroidal field is to generate loops of flux in meridional planes. In the limit as the number of cyclones becomes large, this produces no fields other than these meridional loops. We note that the reduction of the cyclone fields to meridional loops depends on the fluid having finite, rather than infinite, conductivity. Ideally, we produce loops by violent small-scale, short-lived cyclones in a time so short that the effects of finite conductivity may be neglected. We allow the loops to decay for a brief period of time following their formation, in order to eliminate all but those in the meridional plane. Thus, microscopically, the process will not be a steady state, even though the gross dipole field resulting from a steady production of the loops will not vary with time.

Now we should notice that the same microscopic cyclones that generate the meridional loops from the toroidal field will also generate loops from the poloidal field. The loops generated from the poloidal field will be of the same general nature as those generated from the toroidal field, except that they will circulate about the θ-direction (local ξ-axis) instead of the ϕ-direction, the reason being that the initial poloidal field from which they are formed is at right angles to the toroidal field.

If the cyclones have a sense of rotation such that the loops they produce from the toroidal field regenerate the dipole field—and in any dynamo found in nature, they must have the regenerative sense—it may be seen that the loops they produce from the poloidal field have the same direction as the toroidal field. Hence they serve only to regenerate the toroidal field. However, because we are considering an idealized model, it is possible to get around this harmless complication by assuming that the nonuniform rotation greatly exceeds the cyclonic motion, so that the intensity of the poloidal field becomes vanishingly small as compared to the toroidal field. Then the loops generated from the poloidal field vanish in comparison to the loops generated from the toroidal field, and the only effect of the cyclonic motions is to produce the meridional loops.

IV. COALESCENCE OF LOOPS

Having demonstrated that through cancellation the only effect of a large number of cyclonic motions is to produce loops of flux in the meridional planes, let us now investigate analytically the over-all effects of a large number of meridional loops.

We let (R, Θ, Φ) represent the spherical co-ordinates of the center of a meridional loop and $(\rho, \vartheta, \varphi)$ the co-ordinates relative to the center of the loop, so that the co-ordinates (r, θ, ϕ) of a point are related to the center of the loop by

$$r = R + \rho\,, \qquad \theta = \Theta + \vartheta\,, \qquad \phi = \Phi + \varphi\,. \tag{48}$$

The linear dimensions of a given loop are of the order of a, which has been taken as small compared to the radius P of the core. Thus ρ, ϑ, and φ will be small quantities, of the order of a/P times r, θ, and ϕ, respectively.

In the limit as $a \to 0$, the details of the individual loop become irrelevant: The individual details contribute to modes of the order of P/l or P/a and vanish in the limit as $l/P \to 0$ because of their large decay rate, just as did the pairs of loops formed in the local $\xi\eta$-planes. Thus, for convenience, we choose loops described by a Gaussian symmetrical about the loop center. We put

$$B_\rho \equiv B_\zeta = -B_0 \frac{R}{a} \vartheta \exp\left[-\frac{\rho^2 + R^2\vartheta^2 + R^2 \sin^2 \Theta \varphi^2}{a^2}\right], \tag{49}$$

$$B_\vartheta \equiv B_\xi = +B_0 \frac{\rho}{a} \exp\left[-\frac{\rho^2 + R^2\vartheta^2 + R^2 \sin^2 \Theta \varphi^2}{a^2}\right], \tag{50}$$

$$B_\varphi \equiv B_\eta = 0\,. \tag{51}$$

The lines of force are circles with centers on the ϕ- or local η-axis.

© American Astronomical Society • Provided by the NASA Astrophysics Data System

1955ApJ...122..293P

The analysis is more conveniently carried out if we work with the curl of the magnetic field, since this is a toroidal rather than a poloidal vector. We shall need only the ϕ-component of the curl, for reasons that will appear presently:

$$(\nabla \times \boldsymbol{B})_\phi = \frac{2B_0}{a}\left(1 - \frac{\rho^2}{a^2} - \frac{R^2}{a^2}\vartheta^2\right) \exp\left[-\frac{1}{a^2}(\rho^2 + R^2\vartheta^2 + R^2 \sin^2 \Theta \varphi^2)\right]. \tag{52}$$

We now expand equation (52) in terms of vector modes, whereupon we average the amplitude of each mode over all possible positions of the loop centers. If the distribution of the loops is independent of Φ, only the rotationally symmetric toroidal modes will survive the averaging process. The toroidal zonal modes are

$$T_{r(ns)} = T_{\theta(ns)} = 0\,, \qquad T_{\phi(ns)} = c_{ns}\, j_n(k_{sn} r)\, \frac{dP_n(\cos\theta)}{d\theta}\,, \tag{53}$$

where $j_n(x)$ is a spherical Bessel function defined (Stratton 1941) as $(\pi/2x)^{1/2} J_{n+1/2}(x)$. The boundary conditions require (Elsasser 1947) the k_{sn} to be the roots of

$$j_{n-1}(k_{sn}P) = 0\,, \tag{54}$$

where P is the radius of the core.

We now develop equations (53) in ascending powers of the small quantities ρ and ϑ defined in equations (48). We write

$$T_{\phi(ns)} = c_{ns}\,[A_{ns} + B_{ns}\rho + C_{ns}\vartheta + D_{ns}\rho^2 + E_{ns}\rho\vartheta + F_{ns}\vartheta^2 + O^3(\rho, \vartheta)]\,. \tag{55}$$

We note that

$$D_{ns} = \frac{1}{2}\frac{d^2 j_n(k_{sn}R)}{dR^2}\frac{dP_n(\cos\Theta)}{d\Theta}\,, \tag{56}$$

$$F_{ns} = \tfrac{1}{2} j_n(k_{sn}R)\frac{d^3P_n(\cos\Theta)}{d\Theta^3}\,. \tag{57}$$

The modes $\boldsymbol{T}_{(ns)}$ are orthogonal, so that if we write that the toroidal part of $\nabla \times \boldsymbol{B}$ is

$$(\nabla \times \boldsymbol{B})_t = \sum_{n,s} \boldsymbol{T}_{(ns)}\,, \tag{58}$$

multiply by $\boldsymbol{T}_{(pq)}$, and integrate over the volume of the core, we obtain

$$\int dV\,(\nabla \times \boldsymbol{B}) \cdot \boldsymbol{T}_{(pq)} = \int dV\,(\boldsymbol{T}_{(pq)})^2\,. \tag{59}$$

Noting that

$$\begin{aligned}\int_0^\pi d\theta \sin\theta \left[\frac{dP_n(\cos\theta)}{d\theta}\right]^2 &= \int_{-1}^{+1} d\mu\,(1-\mu^2)\,[P_n'(\mu)]^2 \\ &= \frac{2n(n+1)}{2n+1}\,,\end{aligned} \tag{60}$$

(MacRobert 1947) and that

$$\begin{aligned}\int_0^P dr\, r^2 j_n(k_{sn}r) &= \frac{\pi}{2k_{sn}}\int_0^P dr\, r J_{n+1/2}^2(k_{sn}r) \\ &= \tfrac{1}{2}P^3 j_n^2(k_{sn}P)\,,\end{aligned} \tag{61}$$

from equation (54) and Jahnke and Emde (1945), we obtain

$$\int dV\,(\boldsymbol{T}_{(ns)})^2 = (c_{ns})^2 P^3 j_n^2(k_{sn}P)\,\pi\,\frac{2n(n+1)}{2n+1}\,. \tag{62}$$

© American Astronomical Society • Provided by the NASA Astrophysics Data System

1955ApJ...122..293P

From equations (52) and (55) we find that

$$\int dV\,(\nabla\times\boldsymbol{B})\cdot\boldsymbol{T}_{(ns)} = -\pi^{3/2}B_0\,c_{ns}\,a^4\left[D_{ns}+\frac{F_{ns}}{R^2}+O^2\left(\frac{a}{R}\right)\right]. \tag{63}$$

Substituting equations (62) and (63) in equation (59), we obtain, finally,

$$c_{ns} = -\frac{B_0\sqrt{\pi}a^4\,(2n+1)\,(D_{ns}+F_{ns}/R^2)}{P^3\,j_n^2\,(k_{sn}P)\;2n\,(n+1)}. \tag{64}$$

We next consider the time dependence of the loops. They will appear in some random fashion and decay subsequently. Consider the amplitude $\gamma_{ns}(t)$ of the ns-mode due to loops appearing randomly in time at (R, Θ, Φ). If their appearance is described by the random source function, $f_{ns}(t)$, then (Elsasser 1946–1947)

$$\Lambda_{ns}\gamma_{ns}(t) + \frac{d}{dt}\gamma_{ns}(t) = f_{ns}(t)\,, \qquad \Lambda_{ns} = \frac{k_{sn}^2}{\mu\sigma}.$$

The solution is

$$\gamma_{ns}(t) = \int_{-\infty}^{t} dt'\,f_{ns}(t')\exp\left[\Lambda_{ns}(t'-t)\right]. \tag{65}$$

Let us assume that the loops appear suddenly at the random times t_i; thereafter they spread out by diffusion. Since c_{ns} is the contribution of a loop to the ns-mode, we put

$$f_{ns}(t) = c_{ns}\sum_i \delta\,(t-t_i)\,, \tag{66}$$

where $\delta(t-t_i)$ is a Dirac delta function. Then

$$\gamma_{ns}(t) = c_{ns}\sum_i \exp\left[\Lambda_{ns}(t-t_i)\right], \tag{67}$$

where the summation is over all i for which $t_i \leq t$.

The average of $\gamma_{ns}(t)$ over time is

$$\langle\gamma_{ns}(t)\rangle = \lim_{T\to\infty}\frac{1}{2T}\int_{-T}^{+T} dt\,\gamma_{ns}(t)\,,$$

which gives

$$\langle\gamma_{ns}(t)\rangle = c_{ns}\lim_{T\to\infty}\frac{1}{2T}\sum_i\frac{1}{\Lambda_{ns}} = \frac{\nu\,c_{ns}}{\Lambda_{ns}}, \tag{68}$$

where ν is the mean number of loops appearing per unit time.

We let $h(R, \Theta)$ represent the rate at which loops are generated at R, Θ, normalized to give unity upon integration over the core. The expectation value over both space and time of the amplitude γ_{ns} is

$$\langle\langle\gamma_{ns}\rangle\rangle = 2\pi\int_0^P dR\int_0^\pi d\Theta R^2\sin\Theta\,h\,(R,\Theta)\,\langle\gamma_{ns}\rangle. \tag{69}$$

Then, from equations (53), it follows that the curl of the poloidal field resulting from the superposition of the meridional loops is the toroidal vector,

$$\nabla\times\boldsymbol{B}_p = \sum_{n,s}\boldsymbol{T}_{(ns)} = -\boldsymbol{e}_\phi\sum_{n,s}\frac{\partial\Psi_{ns}}{\partial\theta}, \tag{70}$$

where

$$\Psi_{ns} = \langle\langle\gamma_{ns}\rangle\rangle\,j_n\,(k_n r)\,P_n\,(\cos\theta)\,. \tag{71}$$

© American Astronomical Society • Provided by the NASA Astrophysics Data System

1955ApJ...122..293P

$\boldsymbol{B}_p$ itself may be expressed in terms of the poloidal modes, $\boldsymbol{S}_{(ns)}$, by noting that $\boldsymbol{T}_{(ns)}$ must be related to them by

$$\boldsymbol{T}_{(ns)} = \nabla \times \boldsymbol{S}_{(ns)} .$$

Then

$$\nabla \times \boldsymbol{T}_{(ns)} = \nabla \times \nabla \times \boldsymbol{S}_{(ns)} = -\nabla^2 \boldsymbol{S}_{(ns)} = k_{sn}^2 \boldsymbol{S}_{(ns)} ,$$

and

$$\boldsymbol{S}_{(ns)} = (k_{sn})^{-2} \nabla \times \boldsymbol{T}_{(ns)} . \tag{72}$$

Using equation (70) and Legendre's equation, we find that

$$S_{r(ns)} = n(n+1) \frac{\Psi_{ns}}{k_{sn}^2 r} , \tag{73}$$

$$S_{\theta(ns)} = \frac{1}{k_{sn}^2 r} \frac{\partial^2 (k_{sn} r \Psi_{ns})}{\partial \theta \partial (k_{sn} r)} , \tag{74}$$

$$S_{\phi(ns)} = 0 , \tag{75}$$

where, now,

$$\boldsymbol{B}_p = \sum_{n,\, s} \boldsymbol{S}_{(ns)} . \tag{76}$$

V. HOMOGENEOUS MODEL

Now let the loops be distributed with a density $h(R, \Theta)$ over the interior of a sphere of radius $R_0 \leq P$. We shall, in particular, consider a uniform distribution, $h =$ Constant. Then, with proper normalization, we take

$$h = \frac{3}{4\pi R_0^3} . \tag{77}$$

From equations (56), (57), (64), (68), and (69) we have

$$\langle\langle \gamma_{ns} \rangle\rangle = \frac{3}{2R_0^3} \int_0^{R_0} dR \int_0^{\pi} d\Theta R^2 \sin \Theta \langle \gamma_{ns} (R, \Theta) \rangle$$

$$= \frac{3(2n+1) A}{2n(n+1)(k_{sn} R_0)^3 p\, j_n^2 (k_{sn} P)} \tag{78}$$

$$\times [A_1(n, s) B_1(n) + A_2(n, s) B_2(n)] ,$$

where

$$A = \frac{B_0 \sqrt{\pi} a^4 \nu \mu \sigma}{4P^2} , \tag{79}$$

and

$$A_1(n, s) = \int_0^{k_{sn} R_0} du\, u^2 j_n''(u) , \tag{80}$$

$$A_2(n, s) = \int_0^{k_{sn} R_0} du\, j_n(u) , \tag{81}$$

$$B_1(n) = \int_0^{\pi} d\theta \sin\theta \frac{dP_n(\cos\theta)}{d\theta} , \tag{82}$$

$$B_2(n) = \int_0^{\pi} d\theta \sin\theta \frac{d^3 P_n(\cos\theta)}{d\theta^3} . \tag{83}$$

© American Astronomical Society • Provided by the NASA Astrophysics Data System

1955ApJ...122..293P

To evaluate $B_1(n)$, we integrate by parts and obtain

$$B_1(n) = -\int_0^\pi d\theta \cos\theta P_n(\cos\theta) .$$

This may be evaluated (MacRobert 1947) to give

$$B_1(2n) = 0 \qquad B_1(2n+1) = \frac{\Gamma(n+\frac{1}{2})\,\Gamma(n+\frac{3}{2})}{\Gamma(n+1)\,\Gamma(n+2)} . \tag{84}$$

To evaluate $B_2(n)$, we note that

$$\frac{dP_n(\cos\theta)}{d\theta} = -\sin\theta \frac{dP_n(\cos\theta)}{d(\cos\theta)}$$

vanishes at $\theta = 0$ and π. Thus, upon integrating twice by parts, we obtain

$$B_2(n) = -B_1(n) . \tag{85}$$

Since both $B_1(n)$ and $B_2(n)$ vanish for even n, we need compute $A_1(n, s)$ and $A_2(n, s)$ only for odd n. To evaluate $A_1(n, s)$ we integrate by parts and apply the identity

$$j_n'(x) = j_{n-1}(x) - \frac{n+1}{x} j_n(x) , \tag{86}$$

obtaining

$$A_1(n, s) = 2A_2(n, s) + A_3(n, s) , \tag{87}$$

where

$$A_3(n, s) = (k_{sn}R_0)^2 j_{n-1}(k_{sn}R_0) - (n+3)(k_{sn}R_0)\, j_n(k_{sn}R_0) . \tag{88}$$

To compute $A_2(n, s)$ we use the identity

$$j_n(x) = -x^{n-1}\frac{d}{dx}[x^{1-n} j_{n-1}(x)] , \tag{89}$$

and integrate by parts. Repeating the process n times gives

$$\int dx\, j_{2n+1}(x) = -\sum_{m=0}^{n} \frac{2^m n!}{(n-m)!} \frac{j_{2n-m}(x)}{x^m} . \tag{90}$$

Noting that, for small x,

$$j_n(x) \sim \frac{x^n}{(2n+1)!!} , \tag{91}$$

where

$$(2n+1)!! = (2n+1)(2n-1)\ldots 3 \times 1 , \tag{92}$$

we have

$$A_2(2n+1, s) = \frac{2^n n!}{(2n+1)!!} - \sum_{m=0}^{n} \frac{2^m n!}{(n-m)!} \frac{j_{2n-m}[k_{s(2n+1)}R_0]}{[k_{s(2n+1)}R_0]^m} . \tag{93}$$

Using equations (85) and (87), we rewrite equation (78) as follows:

$$\langle\langle \gamma_{ns} \rangle\rangle = -\frac{3(2n+1)\, AB_1(n)[A_2(n, s) + A_3(n, s)]}{2n(n+1)(k_{sn}R_0)^3 P j_n^2(k_{sn}P)} . \tag{94}$$

© American Astronomical Society • Provided by the NASA Astrophysics Data System

1955ApJ...122..293P

From equations (73), (74), and (75) we find the components of the poloidal mode $\mathbf{S}_{(ns)}$:

$$S_{r(2n)s} = S_{\theta(2n)s} = S_{\phi ns} = 0 \,, \tag{95}$$

$$S_{r(2n+1)s} = \frac{3\,(4n+3)\,AB_1\,(2n+1)\,[\,A_2\,(2n+1,s) + A_3\,(2n+1\;s)\,]}{2\,(k_{s(2n+1)}P)\,(k_{s(2n+1)}R_0)^3\,j^2_{2n+1}\,(k_{s(2n+1)}P)} \times \frac{j_{2n+1}\,(k_{s(2n+1)}\,r)}{(k_{s(2n+1)}\,r)}\,P_{2n+1}\,(\cos\theta)\,, \tag{96}$$

$$S_{\theta(2n+1)s} = \frac{3\,(4n+3)\,AB_1\,(2n+1)\,[\,A_2\,(2n+1,s) + A_3\,(2n+1,s)\,]}{4\,(n+1)\,(2n+1)\,(k_{s(2n+1)}P)\,(k_{s(2n+1)}R_0)^3\,j^2_{2n+1}\,(k_{s(2n+1)}P)} \times \frac{1}{(k_{s(2n+1)}\,r)}\,\frac{d}{d\,(k_{s(2n+1)}\,r)}\,[\,(k_{s(2n+1)}\,r)\;j_{2n+1}\,(k_{s(2n+1)}\,r)\,]\,\frac{dP_{2n+1}\,(\cos\theta)}{d\,\theta}\,. \tag{97}$$

It may be shown that the double sum (76) is absolutely convergent, but the proof has been omitted here to save space. The dipole field is composed of the sum, over s, of the terms $\mathbf{S}_{(1s)}$; the quadrupole field vanishes identically; the octupole field is given by the sum of the terms $\mathbf{S}_{(3s)}$; etc. Numerical calculation gives the r-components as

$$\sum_{s=1}^{\infty} S_{r1s} = 0.24P_1\,(\cos\theta)\,,$$

$$\sum_{s=1}^{\infty} S_{r3s} = -\,0.038P_3\,(\cos\theta)\,,$$

for the special case $R_0 = P$.

It may be expected that the field will reduce to a poloidal dipole in the limit as R_0 becomes small. This is readily demonstrated by noting from equations (81) and (91) that

$$A_2\,(n,s) \cong \int_0^{k_{sn}R_0} du\,\frac{u^n}{(2n+1)\,!!} \cong \frac{(k_{sn}R_0)^{\,n+1}}{(n+1)\,(2n+1)\,!!} \tag{98}$$

for small $k_{sn}R_0$. Similarly, from equation (88),

$$A_3\,(n,s) \cong \frac{n-2}{(2n+1)\,!!}\,(k_{sn}R_0)^{\,n+1}\,. \tag{99}$$

Hence

$$A_2\,(n,s) + A_3\,(n,s) \cong \frac{(n^2-n-1)\,(k_{sn}R_0)^{\,n+1}}{(n+1)\,(2n+1)\,!!}\,. \tag{100}$$

From equation (96) we see that $S_{r(2n+1)s}$ is porportional to $(k_{s(2n+1)}R_0)^{2n-1}$. Thus, if we require that

$$\lim_{R_0\to 0}\,\frac{A}{k_{s1}R_0} = M\,, \tag{101}$$

then only the dipole terms survive, and equations (96) and (97) reduce to

$$S_{r1s} = \frac{3MP\,j_1\,(s\pi r/P)}{8\pi\,s^2\,j_1^2(s\pi)\,r}\cos\theta\,, \tag{102}$$

$$S_{\theta 1s} = -\,\frac{3MP}{16\pi\,s^2\,j_1^2\,(s\pi)}\,\frac{1}{r}\,\frac{d}{dr}\left[r\,j_1\left(s\pi\,\frac{r}{P}\right)\right]\sin\theta\,, \tag{103}$$

since $k_{s1}P = s\pi$.

© American Astronomical Society • Provided by the NASA Astrophysics Data System

1955ApJ...122..293P

It should be noted from equation (79) that A is proportional to Ba^4. Thus, in taking the limit in equation (101), we keep constant the dipole moment Ba^3 of the loop. Then

$$\lim_{R_0 \to 0} \frac{A}{k_{s1} R_0} = \text{Constant} \times \lim_{R_0 \to 0} \frac{a}{R_0} = \text{Constant},$$

which maintains the relative size of the loop and R_0, as R_0 becomes small.

From the rapid convergence of expansion (76), as well as from numerical calculations, we conclude that the gross result of the meridional loops is a dipole field with relatively small octupole and higher-order components. This completes the problem, posed at the beginning of Section II, of the generation of the poloidal field from the toroidal field. Thus, combining the generation of the toroidal field from the dipole field with the generation of the dipole field, we have demonstrated that a conducting fluid sphere in which the fluid is moving in a certain way, viz., nonuniform rotation and cyclonic motion, will form a regenerative hydromagnetic dynamo. The external field of the dynamo is primarily a poloidal dipole. The next step of the problem would be, of course, the very difficult dynamical question as to the actual structure of cyclones in the rotating convecting fluid body forming the core of the earth or the central convective zones of some stars.

VI. MIGRATORY DYNAMO

Now that we know the results of the coalescence of the loops formed by cyclonic fluid motions, it is possible to reformulate in a simpler way the development of the coalescence of loops. First, we note that in the local Cartesian co-ordinate system (ξ, η, ζ) the magnetic loop given by equations (49), (50), and (51) may be represented by the vector potential

$$A_\zeta = A_\xi = 0 , \tag{104}$$

$$A_\eta = \tfrac{1}{2} B_0 a \exp\left[-\frac{\xi^2 + \eta^2 + \zeta^2}{a^2} \right], \tag{105}$$

where $\xi = R\vartheta$, $\eta = R \sin \Theta\varphi$, and $\zeta = \rho$. Thus $\boldsymbol{A}$ is a vector in the η-direction and is nonvanishing only within distances of the order of a from the center of the loop at (R, Θ, Φ). If the cyclonic motions are given, the rate of generation of $\boldsymbol{A}$ is simply proportional to the toroidal field $\boldsymbol{e}_\eta B$. Assuming the cyclones to be small and numerous, the average effect is to generate $\boldsymbol{A}$ so that, writing A for the η-component of $\boldsymbol{A}$,

$$\frac{\partial A}{\partial t} = \Gamma B , \tag{106}$$

where Γ is a measure of the violence of the cyclones and may be a function of position. From equation (1) we see that, in order to include the dissipation, we should write equation (106) as

$$\frac{\partial A}{\partial t} = \Gamma B + \frac{1}{\mu\sigma} \nabla^2 A . \tag{107}$$

If there is present a fluid motion,

$$\boldsymbol{v} = \boldsymbol{e}_\eta v , \tag{108}$$

representing the nonuniform rotation, then from equation (1) the toroidal field $\boldsymbol{B}$ is generated from $\boldsymbol{A}$ according to

$$\frac{\partial \boldsymbol{B}}{\partial t} = \nabla \times [\boldsymbol{v} \times (\nabla \times \boldsymbol{A})] + \frac{1}{\mu\sigma} \nabla^2 \boldsymbol{B} . \tag{109}$$

© American Astronomical Society • Provided by the NASA Astrophysics Data System

1955ApJ...122..293P

Since $\boldsymbol{A}$ and $\boldsymbol{v}$ are independent of η and have only η-components, $\partial \boldsymbol{B}/\partial t$ is in the η-direction, as required, and equation (109) reduces to

$$\frac{\partial B}{\partial t}=\left(\frac{\partial v}{\partial \zeta}\frac{\partial A}{\partial \xi}-\frac{\partial v}{\partial \xi}\frac{\partial A}{\partial \zeta}\right)+\frac{1}{\mu\sigma}\nabla^2 B\,. \tag{110}$$

It is interesting to solve the dynamo equations (107) and (110) subject to rectangular, rather than spherical, boundary conditions. Thus, instead of (ξ, η, ζ) representing local Cartesian co-ordinates in the spherical core of the earth, consider a rectangular volume of fluid with the Cartesian co-ordinates (ξ, η, ζ) throughout. Instead of nonuniform rotation, we introduce uniform shearing. We make v vary linearly with ζ, so that

$$\frac{\partial v}{\partial \zeta}=H=\text{Constant}\,, \qquad \frac{\partial v}{\partial \xi}=0\,. \tag{111}$$

Then equation (110) reduces to

$$\frac{\partial B}{\partial t}=H\frac{\partial A}{\partial \xi}+\frac{1}{\mu\sigma}\nabla^2 B\,. \tag{112}$$

If we distribute the cyclones uniformly throughout the space, then Γ is a constant, and the dynamo equations reduce to two simultaneous linear equations with constant coefficients.

As a solution to equations (107) and (111) we let

$$A=A_0\exp\left[i\left(\omega t+k\xi\right)\right]\,, \qquad B=B_0\exp\left[i\left(\omega t+k\xi\right)\right]\,. \tag{113}$$

Substituting in equations (107) and (111), we obtain

$$A_0\left(i\omega+\frac{k^2}{\mu\sigma}\right)-B_0\Gamma=0\,, \tag{114}$$

$$-A_0 ikH+B_0\left(i\omega+\frac{k^2}{\mu\sigma}\right)=0\,. \tag{115}$$

Setting the determinant of the coefficients equal to zero, we find that

$$\left(i\omega+\frac{k^2}{\mu\sigma}\right)^2-ikH\Gamma=0\,. \tag{116}$$

We are interested only in the solutions which survive to large values of t, viz., those for which the real part of $i\omega$ is positive. Thus we are interested only in the roots

$$i\omega=\left(\Omega-\frac{k^2}{\mu\sigma}\right)\pm i\Omega\,, \tag{117}$$

yielding

$$A_0=-B_0\frac{(1\pm i)\,\Omega}{kH}\,, \tag{118}$$

where

$$\Omega=\left(\frac{|kH\Gamma|}{2}\right)^{1/2}\,, \tag{119}$$

and the $\pm$ has the same sign as the product $kH\Gamma$.

© American Astronomical Society • Provided by the NASA Astrophysics Data System

1955ApJ...122..293P

Solutions (113) of the dynamo equations become the migratory *dynamo waves*,

$$B = B_0 \exp\left[\left(\Omega - \frac{k^2}{\mu\sigma}\right)t\right] \exp\left[i\left(k\xi \pm \Omega t\right)\right], \tag{120}$$

$$A = -B_0 \frac{\Omega}{kH}(1 \mp i) \exp\left[\left(\Omega - \frac{k^2}{\mu\sigma}\right)t\right] \exp\left[i\left(k\xi \pm \Omega t\right)\right]. \tag{121}$$

If $kH\Gamma > 0$, we have a dynamo wave traveling in the negative ξ-direction; if $kH\Gamma < 0$, the wave travels in the positive ξ-direction. The vector potential is $\pi/4$ out of phase with B. Assuming that $\Omega > k^2/\mu\sigma$, the amplitude increases exponentially with time. If the conductivity is large enough that $\Omega \gg k^2/\mu\sigma$, the amplitude increases by a factor of exp 2π, or about a factor of 500, for every $2\pi/k$ (one wave length) the wave propagates. The velocity of propagation Ω/k varies as $k^{-1/2}$ and hence increases as the square root of the wave length.

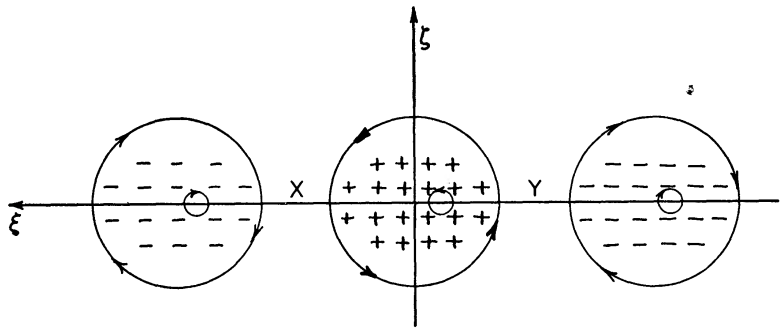

FIG. 5.—Schematic drawing of a section along a train of migratory dynamo waves The + signs represent flux coming out of the paper, and − signs into the paper.

To understand physically the operation of the dynamo wave, consider Figure 5, which represents a section through the dynamo along the $\zeta\xi$-plane, as seen from a point on the positive η-axis. The + signs represent regions where $B > 0$, so that $\boldsymbol{B}$ is directed out of the paper; the − signs, into the paper. If $\Gamma > 0$, the loops of flux produced by the individual cyclones have the direction shown by the small circles. The individual loops coalesce to form the large loops of flux.

If $\partial v/\partial\zeta$ and hence H is positive, then the fluid in the upper part of the figure is moving out of the paper relative to the fluid in the lower part. The loops are being sheared so that, for instance, in region X a field in the negative η-direction is being generated. In region Y a field in the positive η-direction is being generated. It is readily seen that this regenerates the right-hand side of each of the bands of flux of B and degenerates the left side The result is a migration to the right, the negative ξ-direction.

The migratory dynamo may be of interest in stellar magnetic activity. The magnetic fields of the sun show little or none of the steady dipole component observed for the earth. The sunspots (Kuiper 1953) and some of the prominence activity (Menzel and Bell 1953), which may be basically hydromagnetic in character, definitely exhibit migration from high toward low latitudes. The corona undergoes over-all changes in step with the magnetic activity, suggesting that sunspots and prominences are not just individual isolated magnetic phenomena but are secondary effects of a general solar magnetic cycle.

If we inquire into the geometry of the solar convective zone, where a dynamo should be located if it exists, we find this zone to be a shell sufficiently thin ($\approx 10^5$ km) that we may neglect its curvature. The dynamo equations in such a flattened space give just a migratory dynamo, as we have shown.

© American Astronomical Society • Provided by the NASA Astrophysics Data System

1955ApJ...122..293P

Finally, we note that if cyclones exist in the solar convective zone, we would expect their rotation to be strongest near the poles and to vanish at the equator. The shearing due to nonuniform rotation, on the other hand, should vanish at the poles and be strongest near the equator. Hence the toroidal field B, produced by the shearing H, will be strongest in low latitudes, and the poloidal loops (derived from A), produced by the cyclonic motions Γ, will predominate near the poles. If, as has been suggested elsewhere (Parker 1955), sunspots result from the magnetic buoyancy of the solar toroidal field, then we would expect sunspots where the toroidal field is strongest. We may thus obtain an explanation for the fact that sunspots appear only in low latitudes, as well as for the migration toward the equator of the region of formation of sunspots, and for the reversal of spot polarity between cycles. Fluid velocities of the order of 1 m/sec are sufficient to produce dynamo waves migrating from the pole to the equator of the sun in 22 years.

Altogether, it would seem that a migratory dynamo of some sort is strongly suggested for the sun. It is interesting to note that a high rate of rotation, together with cyclonic velocities of 1 km/sec, might produce a migratory dynamo giving the vigorous magnetic activity observed by Babcock in some magnetic stars.

I should like to express my gratitude to Dr. W. M. Elsasser for the many suggestions and helpful criticism which have contributed to the development of this paper. I should also like to thank Sir Edward Bullard for a stimulating discussion of the geomagnetic problem and Dr. S. Chandrasekhar for several valuable suggestions in the presentation of the dynamo models.

APPENDIX

Consider the interaction with the toroidal magnetic field of a localized cyclonic fluid motion. We include the return flow of the cyclone, so that the velocity can be made to vanish identically outside the cyclonic region. As was stated earlier, the influx and efflux of fluid at the ends of the cyclonic column, together with the return flow, complicate the calculation of the trajectories of the fluid elements to such an extent that a rigorous calculation of the resulting magnetic field is difficult. Therefore, having computed rigorously in the text the field generated by an idealized cyclone, without influx and efflux or return flow, we now compute by perturbation methods an approximate expression for the field generated by a cyclone with a return flow.

We shall investigate, then, a localized cyclonic fluid motion in a large-scale magnetic field. We take the axis of the cyclone perpendicular to the magnetic field. Using the local Cartesian system (ξ, η, ζ), we assume that the large-scale field is of the form

$$\boldsymbol{B} = \boldsymbol{e}_\eta B(\zeta) . \tag{122}$$

Let the velocity field of the fluid be $\boldsymbol{v} = \boldsymbol{u} + \boldsymbol{w}$; then $\boldsymbol{u}$ represents the convection along the ζ-axis, together with the associated influx and efflux and the necessary return flow, and $\boldsymbol{w}$ represents the rotation of the fluid about the ζ-axis.

Without much loss of generality, we may take $u_\xi = 0$ and set

$$u_\eta = -u_0(t)\, X(\xi)\, Y(\eta)\, Z'(\zeta) , \qquad u_\zeta = u_0(t)\, X(\xi)\, Y'(\eta)\, Z(\zeta) , \tag{123}$$

where the primes denote derivatives. We represent $\boldsymbol{w}$ by $w_\zeta = 0$ and

$$w_\xi = -\Omega(t)\, \eta R(\rho)\, S(\zeta) , \qquad w_\eta = \Omega(t)\, \xi R(\rho)\, S(\zeta) , \tag{124}$$

where $u_0(t)$ and $\Omega(t)$ are representative of the corresponding magnitudes, provided that all the other functions are suitably normalized. Formulae (123) and (124) guarantee that $\nabla \cdot \boldsymbol{u}$ and $\nabla \cdot \boldsymbol{w}$ vanish.

From equation (1) we have for the first-order perturbation of the magnetic field

$$\boldsymbol{\beta}(t) = \int_0^t dt \nabla \times [(\boldsymbol{u} + \boldsymbol{w}) \times \boldsymbol{B}] . \tag{125}$$

© American Astronomical Society • Provided by the NASA Astrophysics Data System

1955ApJ...122..293P

The second-order perturbation field is

$$\boldsymbol{\gamma}(t) = \int_0^t dt \nabla \times [(\boldsymbol{u}+\boldsymbol{w}) \times \boldsymbol{\beta}(t)] . \tag{126}$$

This field consists of the sum of four terms which arise, depending on whether the first step of the interaction is taken to involve either $\boldsymbol{u}$ or $\boldsymbol{w}$ and whether the second step involves either $\boldsymbol{u}$ or $\boldsymbol{w}$. Two of these terms are quadratic, in $\boldsymbol{u}$ alone and in $\boldsymbol{w}$ alone; it is physically obvious that they will not contribute to loops in the meridional or $\zeta\xi$-planes. This may be demonstrated quantitatively by noting that the ξ-component of the term of second order in $u_0(t)$ and the ζ-component of the term of second order in $\Omega(t)$ are zero. Thus the terms cannot contribute individually. If we combine the nonzero ζ-component of the former and the nonzero ξ-component of the latter, we obtain a field which can be shown to have no net circulation about the η-axis. We therefore omit these quadratic terms and keep only the two mixed terms which involve $\boldsymbol{u}$ in one step of the interaction and $\boldsymbol{w}$ in the other. After somewhat lengthy but straightforward calculations, this part of the second-order field, say $\boldsymbol{\delta}(t)$, is found to have the following components in the meridional planes:

$$\begin{aligned}\delta_\xi(t) = f(t)\, X(\xi) \Big\{ &-\left[\frac{\partial}{\partial\eta} Y(\eta) \frac{\partial}{\partial\eta} \eta R(\rho)\right] Z'(\zeta) S(\zeta) B(\zeta) \\ &+\left(\left[\frac{\partial}{\partial\eta} \eta R(\rho)\right] Y'(\eta) - R(\rho)\, \eta\, Y''(\eta)\right)\left[\frac{\partial}{\partial\zeta} Z(\zeta) S(\zeta) B(\zeta)\right] \\ &+\left[\frac{\partial}{\partial\eta} Y'(\eta)\, \eta R(\rho)\right] S(\zeta) \left[\frac{\partial}{\partial\zeta} Z(\zeta) B(\zeta)\right]\Big\} ;\end{aligned} \tag{127}$$

$$\begin{aligned}\delta_\zeta(t) = f(t) \Big\{ &-\left[\frac{\partial}{\partial\xi} X(\xi) \frac{\partial}{\partial\eta} \eta R(\rho)\right] Y'(\eta) + X(\xi) \\ &\times\left[\frac{\partial}{\partial\eta} \eta Y'(\eta) \frac{\partial}{\partial\xi} R(\rho)\right] + \left[\frac{\partial}{\partial\xi} X(\xi) R(\rho)\right] \eta Y''(\eta) - \xi X(\xi) \\ &\times\left[\frac{\partial}{\partial\eta} R(\rho)\, Y''(\eta)\right]\Big\} Z(\zeta) S(\zeta) B(\zeta) ,\end{aligned} \tag{128}$$

where

$$f(t) = \int_0^t dt' u_0(t') \int_0^{t'} dt'' \Omega(t'') = \int_0^t dt' \Omega(t') \int_0^{t'} dt'' u_0(t'') . \tag{129}$$

The field lines of $\boldsymbol{u}$, $\boldsymbol{w}$, and $\boldsymbol{\delta}$ are given by

$$\frac{d\eta}{u_\eta} = \frac{d\zeta}{u_\zeta}, \qquad \frac{d\xi}{w_\xi} = \frac{d\eta}{w_\eta}, \qquad \frac{d\xi}{\delta_\xi} = \frac{d\eta}{\delta_\eta} = \frac{d\zeta}{\delta_\zeta} . \tag{130}$$

For $\boldsymbol{u}$ we obtain the family of curves

$$Y(\eta) Z(\zeta) = C_1 ; \tag{131}$$

for $\boldsymbol{w}$,

$$\xi^2 + \eta^2 = C_2 , \tag{132}$$

where C_1 and C_2 are the parameters of each family. The differential equation for the field lines of $\boldsymbol{\delta}$ is not readily integrated except in special cases. We therefore consider the case of a Gaussian distribution:

$$X(\xi) = \exp\left(-\frac{\xi^2}{a^2}\right), \qquad Y(\eta) = \eta \exp\left(-\frac{\eta^2}{a^2}\right), \qquad Z(\zeta) = \exp\left(-\frac{\zeta^2}{a^2}\right); \tag{133}$$

$$R(\rho) = \exp\left(-\frac{\rho^2}{a^2}\right), \quad S(\zeta) = \exp\left(-\frac{\zeta^2}{a^2}\right), \quad B(\zeta) = B_0 \exp\left[-\frac{(\zeta-b)^2}{c^2}\right] . \tag{134}$$

© American Astronomical Society • Provided by the NASA Astrophysics Data System

1955ApJ...122..293P

Then equation (131) becomes

$$\eta \exp\left[-\frac{1}{a^2}(\eta^2+\zeta^2)\right]=C_1 \qquad \text{or} \qquad \eta^2+\zeta^2=a^2\ln\frac{\eta}{C_1}, \tag{135}$$

and equations (127) and (128) become

$$\delta_\xi(t)=f(t)B_0 2\left[-\zeta\pi(\eta)+\nu(\eta)\right]\exp\left[-\frac{2}{a^2}(\xi^2+\eta^2+\zeta^2)-\frac{(\zeta-b)^2}{c^2}\right], \tag{136}$$

$$\delta_\zeta(t)=f(t)B_0 2\,\xi\omega(\eta)\exp\left[-\frac{2}{a^2}(\xi^2+\eta^2+\zeta^2)-\frac{(\zeta-b)^2}{c^2}\right], \tag{137}$$

where

$$\pi(\eta)=\frac{2}{a^2}\left(1+2\frac{\eta^2}{a^2}\right)+\frac{2}{c^2}\left(1-2\frac{\eta^2}{a^2}\right)^2, \qquad \nu(\eta)=\frac{2b}{c^2}\left(1-2\frac{\eta^2}{a^2}\right)^2,$$
$$\omega(\eta)=\frac{4}{a^2}\left(1-\frac{\eta^2}{a^2}\right). \tag{138}$$

The neutral line where $\delta_\xi(t)$ and $\delta_\zeta(t)$ vanish simultaneously will be denoted by $\xi_0(\eta)$ and $\zeta_0(\eta)$. We see from equation (136) that

$$\xi_0(\eta)=0, \qquad \zeta_0(\eta)=\frac{\nu(\eta)}{\pi(\eta)}. \tag{139}$$

Substituting equations (136) and (137) in equation (130), we obtain for the field lines of $\boldsymbol{\delta}(t)$ the family of curves

$$[\zeta-\zeta_0(\eta)]^2+\frac{\omega(\eta)}{\pi(\eta)}\xi^2=C_3. \tag{140}$$

These are ellipses for $\eta^2<a^2$ with centers on the neutral line. For $\eta^2>a^2$ the lines form hyperbolas.

The problem of defining the "strength" of the magnetic loop generated offers some difficulty. The η-component of curl $\boldsymbol{\delta}$ vanishes on integration over the volume, but this does not mean that there is no net circulation of magnetic flux about the neutral line. Perhaps the simplest way to demonstrate that such a circulation has been generated is the following: We compute the flux across the $\eta\zeta$-plane above $\zeta_0(\eta)$ and show that at least some of it bends around so as to penetrate the surface $\zeta=\zeta_0(\eta)$, $\xi>0$. The fluxes are

$$\Phi_\xi=+\int_{-\infty}^{+\infty}d\eta\int_{\zeta_0(\eta)}^{+\infty}d\zeta\,\delta_\xi\,|^{\xi=0}, \qquad \Phi_\zeta=-\int_{-\infty}^{+\infty}d\eta\int_0^{\infty}d\xi\,\delta_\zeta\,|^{\zeta=\zeta_0(\eta)}. \tag{141}$$

Using equations (136) and (137), we find

$$\Phi_\xi=-2f(t)B_0\int_{-\infty}^{+\infty}d\eta\int_{\zeta_0(\eta)}^{\infty}d\zeta\left[\zeta\pi(\eta)-\nu(\eta)\right]\exp\left[-\frac{2}{a^2}(\eta^2+\zeta^2)-\frac{1}{c^2}(\zeta-b)^2\right], \tag{142}$$

$$\Phi_\zeta=-2f(t)B_0\int_{-\infty}^{+\infty}d\eta\,\omega(\eta)\exp\left\{-\frac{2}{a^2}[\eta^2+\zeta_0^2(\eta)]-\frac{1}{c^2}[\zeta_0(\eta)-b]^2\right\}\times\int_0^{\infty}d\xi\,\xi\exp\left(-\frac{2}{a^2}\xi^2\right). \tag{143}$$

In the integrand of the expression for Φ_ξ, we have $\zeta\geq\zeta_0(\eta)$. From equations (139) it follows that the integrand is always positive. In the expression for Φ_ζ the sign of the integrand is the same as

© American Astronomical Society • Provided by the NASA Astrophysics Data System

1955ApJ...122..293P

the sign of $\omega(\eta)$ From equation (138) we see that $\omega(\eta)$ is positive if $\eta^2 < a^2$, otherwise negative But for $\eta^2 > a^2$ the Gaussian factor is very small, so small in fact that the integration over $\eta^2 > a^2$ constitutes only a small percentage of the total value. Thus the integrals are positive, and Φ_ξ and Φ_ζ have the same sign; hence there is a net circulation of flux about the neutral line independent of the relative magnitudes of parameters a, b, and c

Since the existence of a net circulation is independent of a, b, and c, we shall limit the evaluation of the fluxes to the special case $b = 0$, $c = \infty$. Then $\zeta_0(\eta) = 0$, and

$$\Phi_\xi = \Phi_\zeta = -\frac{3\sqrt{\pi}}{2\sqrt{2}} f(t) B_0 a . \tag{144}$$

REFERENCES

Brand, L 1947, *Vector and Tensor Analysis* (New York: John Wiley & Sons).
Bullard, E., and Gellman, H 1954, *Phil Trans R Soc London*, **247**, 213
Cowling, T. G. 1933, *M N*, **94**, 39
Elsasser, W. M 1946–1947, *Phys Rev*, **69**, 106; **70**, 202; **72**, 821.
——— 1950, *Rev. Mod. Phys*, **22**, 1.
Jahnke, E, and Emde, F. 1945, *Tables of Functions with Formulae and Curves* (New York: Dover Publications).
Kuiper, G P. 1953, *The Sun* (Chicago: University of Chicago Press).
Lundquist, S. 1952, *Ark f Fysik*, **5**, 297
MacRobert, T M 1947, *Spherical Harmonics* (2d ed ; New York: Dover Publications), pp 105, 106
Menzel, D H., and Bell, B. 1953, *Trans 11th Volta Cong*, *1952* (Rome: Acad. Lincei).
Parker, E. N. 1955, *Ap J*, **121**, 491.
Stratton, J. A. 1941, *Electromagnetic Theory* (1st ed.; New York: McGraw-Hill Book Co).
Watson, G N 1944, *Theory of Bessel Functions* (2d ed ; Cambridge: At the University Press), p 521

© American Astronomical Society • Provided by the NASA Astrophysics Data System